BRIDGE INSPECTION REPORT - FORM IV
DETAILS OF SHORT SPAN BRIDGES

DIST. 03 COUNTY 41 ROUTE 17 SEC. 00/F LOG 3.94 BRIDGE NO. 21722

INSP. BY JCO-MAM DATE 4/10/03

SUPERSTRUCTURE

SPAN NO.	TYPE	DECKING						STRINGERS OR GIRDERS										DIAPHRAGMS OR FLOOR BEAMS					RAILING		
		E_T	A_T	C_T	T_T	MAT'L	COND.	SHAPE	MAT'L.	S_W	S_D	F_T	H	AVG.	K	S	COND.	SHAPE	D_W	D_D	D_S	COND.	MAT'L	SHAPE	COND.
1	6	N	N	8"	N	2	8	2	3	14.5"	14"	11/16"	7	32.3"	18'-10¼"	34'-8"	8	10	2½"	2"	FORM III	8	3	10	7

A_T = ASPHALT THICKNESS (INCHES)
B_D = BENT CAP DEPTH (INCHES)
B_W = BENT CAP WIDTH (INCHES)
C_R = COLUMN CIRCUMFERENCE (INCHES)
C_T = CONCRETE THICKNESS (INCHES)
D_D = DIAPHRAGM DEPTH (INCHES)
D_S = DIAPHRAGM SPACING (FEET)
D_W = DIAPHRAGM WIDTH (INCHES)
E_T = GRAVEL OR SOIL DEPTH (INCHES)
F_T = AVERAGE FLANGE THICKNESS (INCHES)
S = SPAN OF STRINGERS (FEET)
T_R = TIMBER RUNNER THICKNESS (INCHES)
T_T = TIMBER THICKNESS (INCHES)

SUPERSTRUCTURE TYPE

1. TIMBER STRINGER & PLANK DECK.
2. TIMBER STRINGER & LAMINATED DECK.
3. TIMBER STRINGER & CONCRETE DECK.
4. STEEL STRINGER & PLANK DECK.
5. STEEL STRINGER & LAMINATED DECK.
6. STEEL STRINGER & CONCRETE DECK.
7. R.C. DECK GIRDER.
8. R.C. SLAB.
9. OTHER-SEE DETAIL ON FORM III.

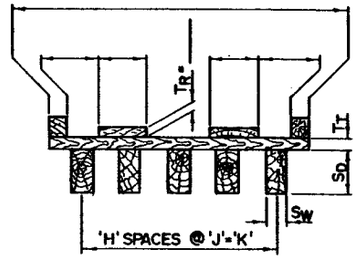

TYPE 1,2 & 3

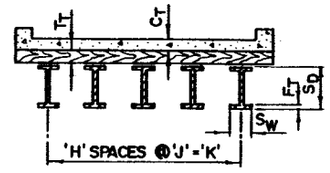

TYPE 4,5 & 6

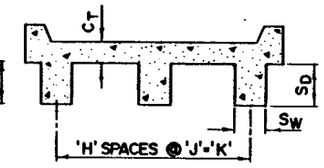

TYPE 7

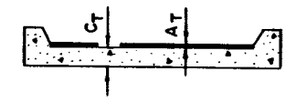

TYPE 8

MATERIAL

1. TIMBER
2. CONCRETE
3. STEEL
4. ALUMINUM
5. OTHER

SUBSTRUCTURE

SUPPORT NO.	TYPE	CAP				COLUMNS OR PILES									WEBWALLS		
		MAT'L	B_W	B_D	COND.	MAT'L	SHAPE	C_X	C_Y	C_R	P	AVG.	R	COND.	W_X	W_Y	COND.
1	8	3	13⅛"	12⅞"	8	5	7			40.8"	4	56"	18'-8"	8			
2	8	3	13⅛"	12⅞"	8	5	7			40.8"	4	56"	18'-8"	8			

SHAPE CODE

1. ▭
2. I UNIFORM FLANGE THICKNESS
3. I VARYING FLANGE THICKNESS
4. [
5. ⬡
6. ●
7. ○
8. }
9. ⬢
10. OTHER - SEE FORM III.

SUBSTRUCTURE TYPE

1. FULL HEIGHT ABUTMENT.
2. STUB OR OPEN ABUTMENT.
3. PILE INTERMEDIATE BENT.
4. SINGLE COLUMN INT. BENT.
5. TWO COLUMN INT. BENT.
6. THREE COLUMN INT. BENT.
7. SOLID WALL PIER.
8. OTHER - SEE FORM III.

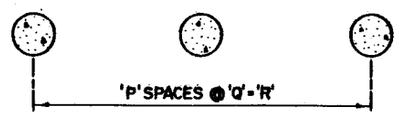

SECTION THRU PILE BENT AT CAP

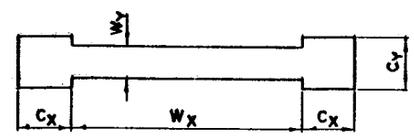

SECTION THRU SOLID WALL PIER

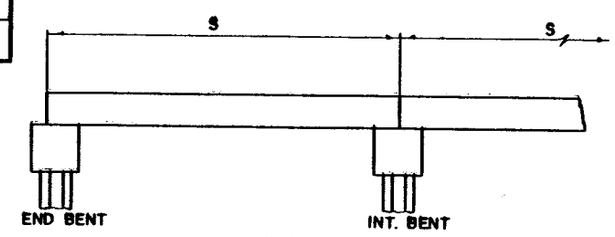

LONGITUDINAL SECTION

Rev. Jan. 90

AMTD FORM NO. 81-104

Insp. JCO-MHM
Date 04/10/03
Dist. 03 Co. 41 LITTLE RIVER Rt. 17 Sec. 00/F Log 394 Br. No. 21722

BRIDGE INSPECTION REPORT — FORM III

P. (1 OF 4)

(NO SCALE)

LAYOUT SKETCH

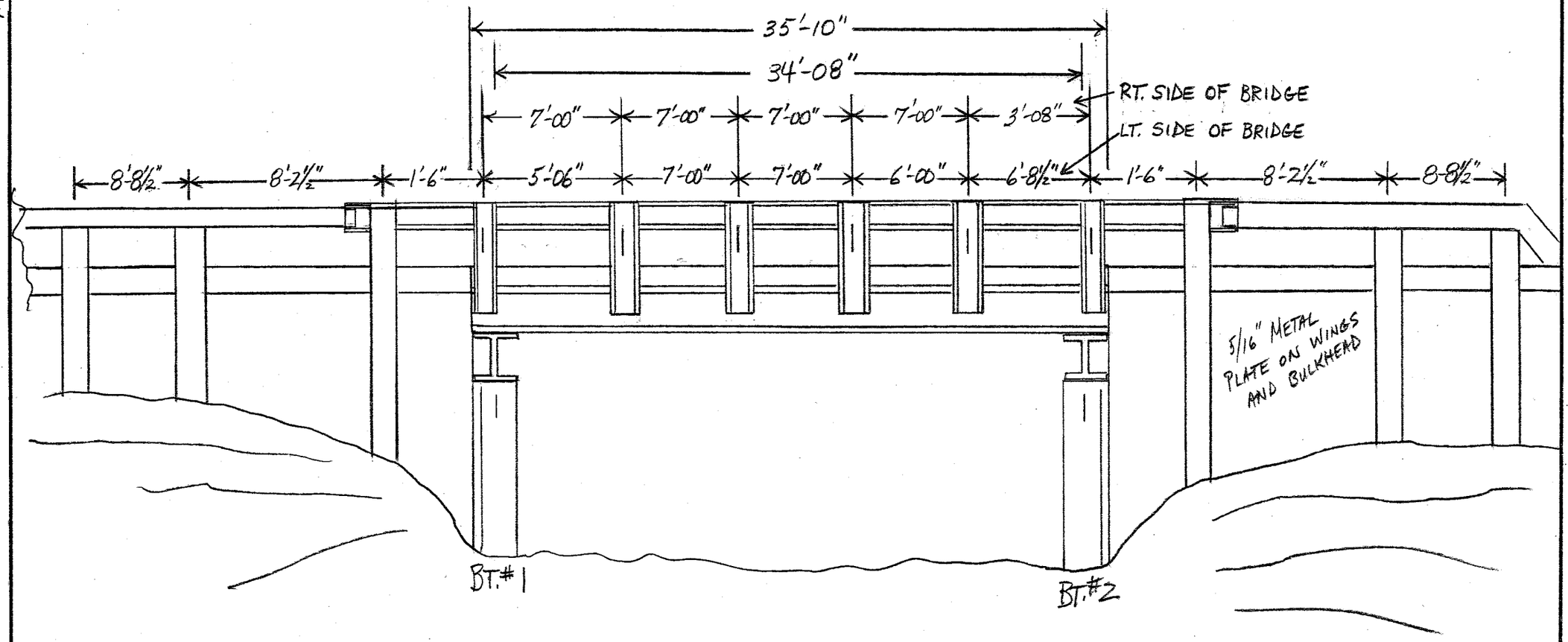

AHD Form No. BI103

(NO SCALE)

DECK END VIEW

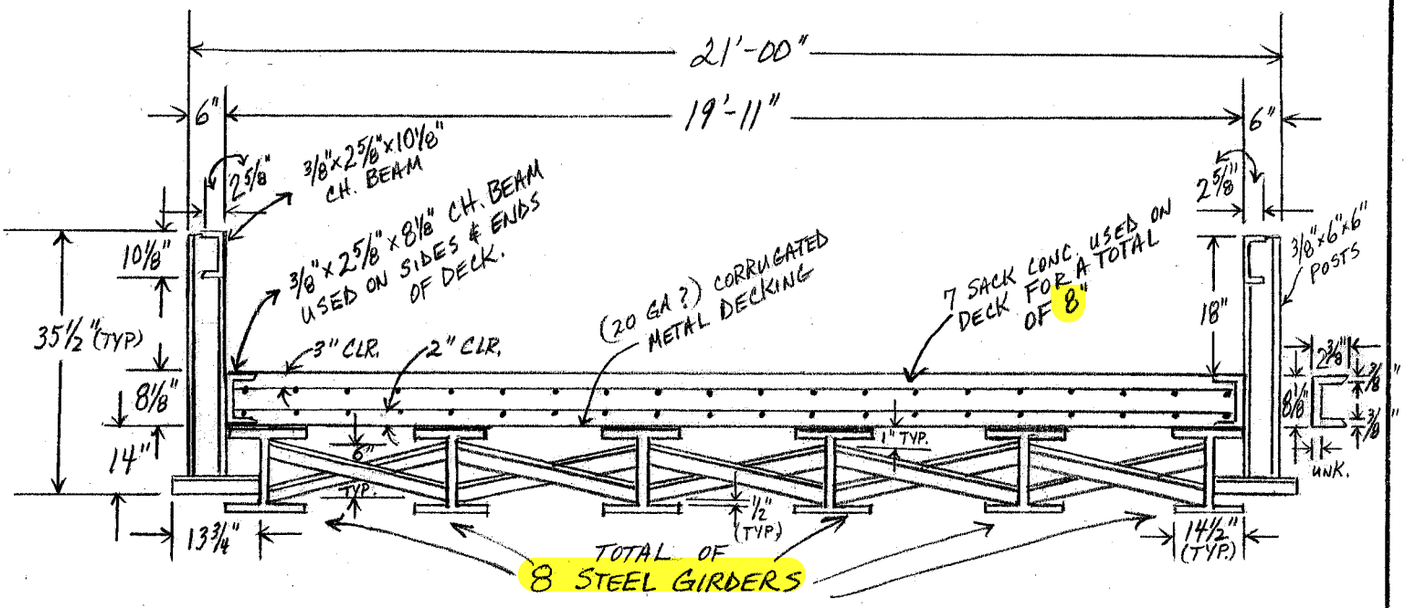

(SEE BEAM LAYOUT FOR X-BRACING LOCATIONS)

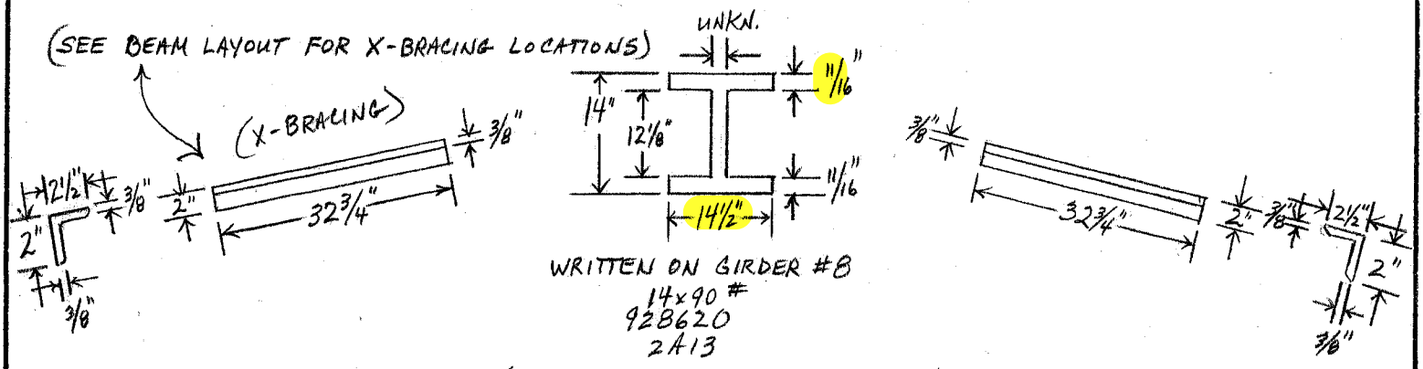

WRITTEN ON GIRDER #8
14x90 #
928620
2A13

(SIDE VIEW OF METAL DECKING)

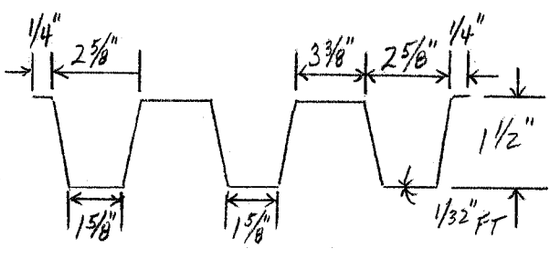

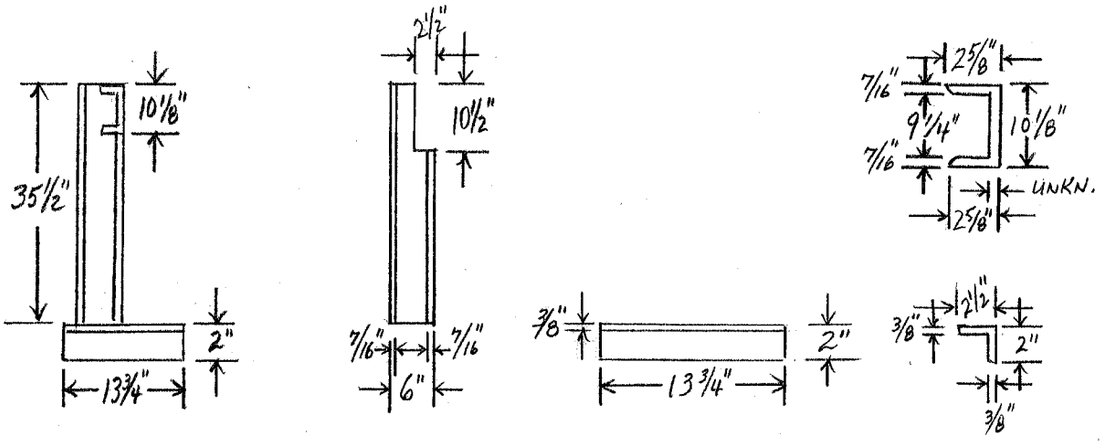

Insp. JCO-MAM
Date 04/10/03

BRIDGE INSPECTION REPORT — FORM III

P. (2 OF 4)

Dist. 03 Co. 41 LITTLE RIVER Rt. 17 Sec. 00/F Log 3.94 Br. No. 21722

BEAM LAYOUT

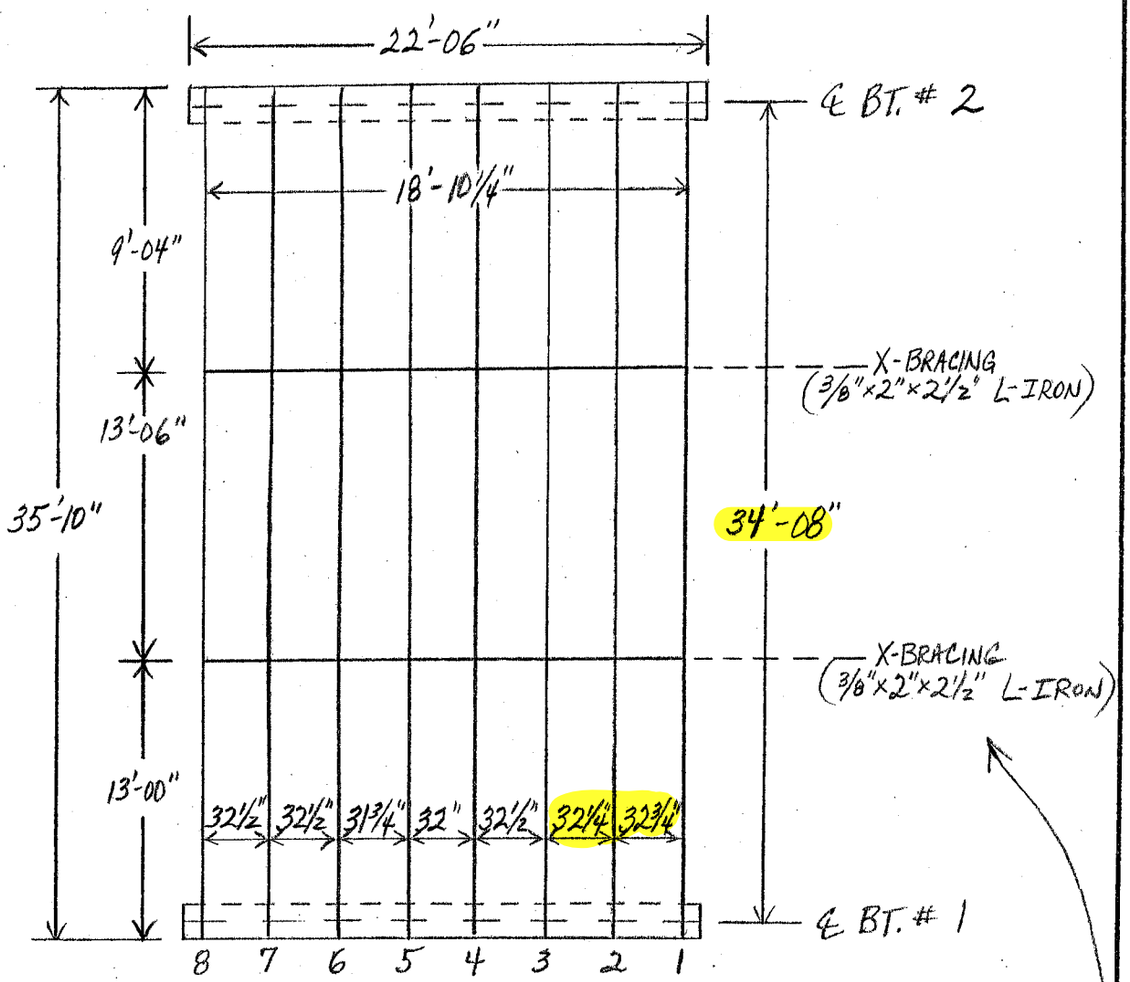

11/16" assumed

NOTES:

1.) ALL GIRDERS ARE 14×90# H-BEAMS.

2.) GIRDER FIELD MEASUREMENTS: 11/16" FLANGE THICKNESS
14½" WIDE FLANGE
13⅛" HIGH

3.) LOCATION OF X-BRACING SHOWN ON SKETCH ABOVE.

Insp. JCO-MAM
Date 04/10/03

BRIDGE INSPECTION REPORT — FORM III

P. (3 OF 4)

Dist. 03 Co. 41 LITTLE RIVER Rt. 17 Sec. 00/F Log 3.94 Br. No. 21722

(NO SCALE)

SUBSTRUCTURE

BENTS #1 & #2

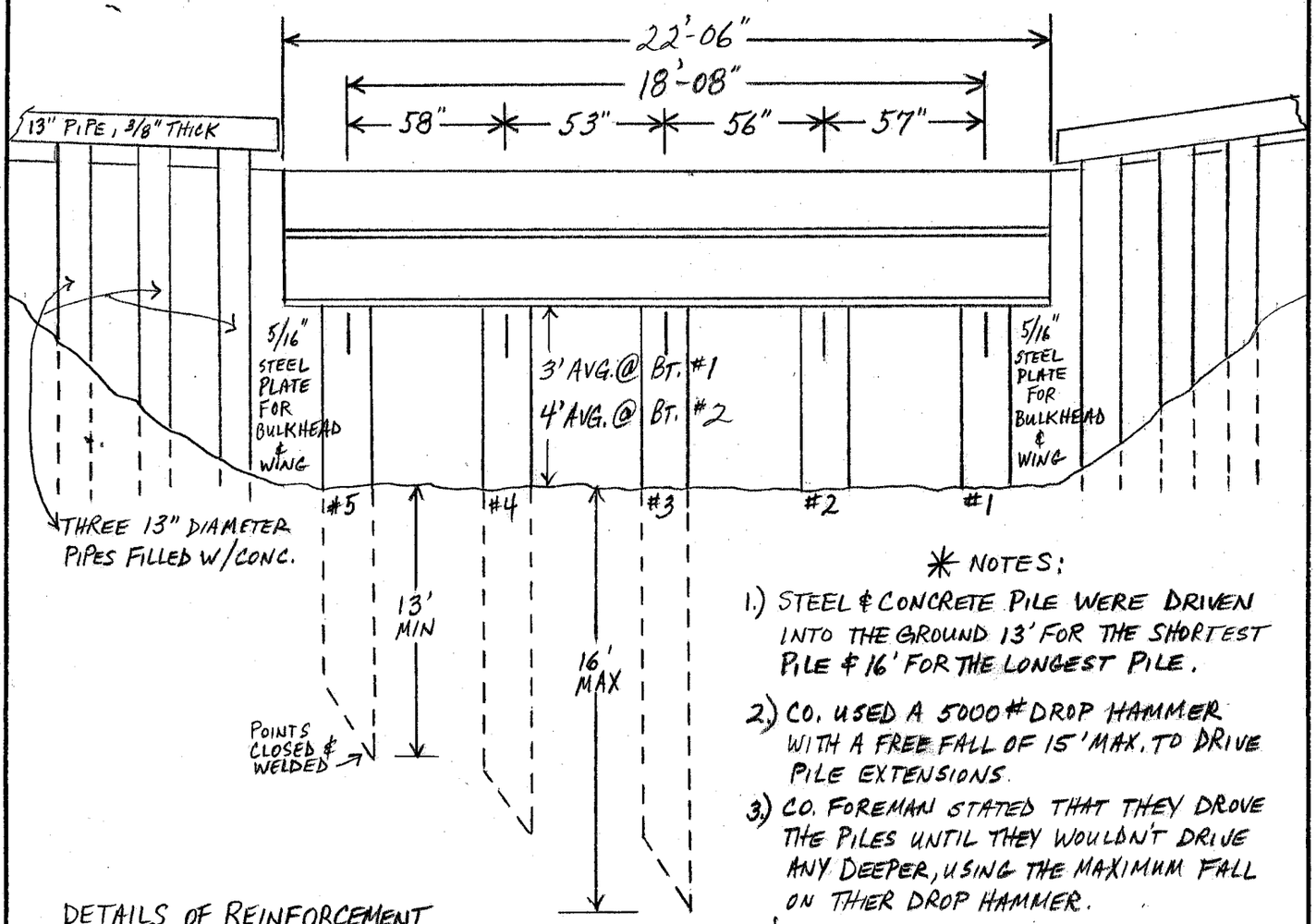

DETAILS OF REINFORCEMENT IN STEEL PILES/COL.

*

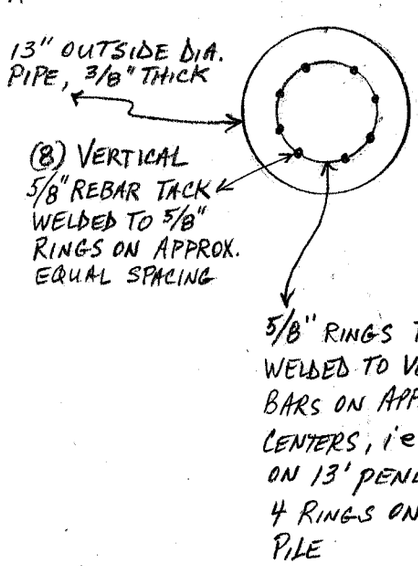

END VIEW OF H-BEAM CAP

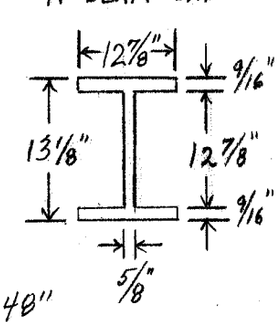

* NOTES:

1.) STEEL & CONCRETE PILE WERE DRIVEN INTO THE GROUND 13' FOR THE SHORTEST PILE & 16' FOR THE LONGEST PILE.

2.) CO. USED A 5000# DROP HAMMER WITH A FREE FALL OF 15' MAX. TO DRIVE PILE EXTENSIONS.

3.) CO. FOREMAN STATED THAT THEY DROVE THE PILES UNTIL THEY WOULDN'T DRIVE ANY DEEPER, USING THE MAXIMUM FALL ON THER DROP HAMMER.

4.) PILES WERE DRIVEN, THEN A CAGE OF REBAR WAS PLACED IN THE PIPE, AND 7-SACK CONC. WAS POURED IN THE STEEL PIPE OR PILES.

5.) 13" O.D. PIPE, WITH 1/2" THICK WALL WAS USED.

6.) EIGHT 5/8" REBAR, VERTICALLY, WITH 5/8" REBAR BAND HORIZ. ON 48" CENTERS FOR BANDS, WERE USED TO MAKE UP THE CAGES PLACED IN THE PILE EXTENSIONS.

Insp. JCO-MAM

Date 04/10/03

BRIDGE INSPECTION REPORT — FORM III

Dist. 03 Co. 41 LITTLE RIVER Rt. 17 Sec. 00/F Log 3.94 Br. No. 21722